TCB'S (TRACKSIDE CONNECTION BOXES)

Part No:	ILS100159/001	**Dimensions (mm):**	250(H) x 300(W) x 160(D)
PADS Number:	086/010787	**Weight:**	APPROX 4.5KG
Description:	8 Way Trackside Connection Box	**IP/IK Rating:**	IP66 / IK10
Application/s:	Points Heating	**Material:**	GRP

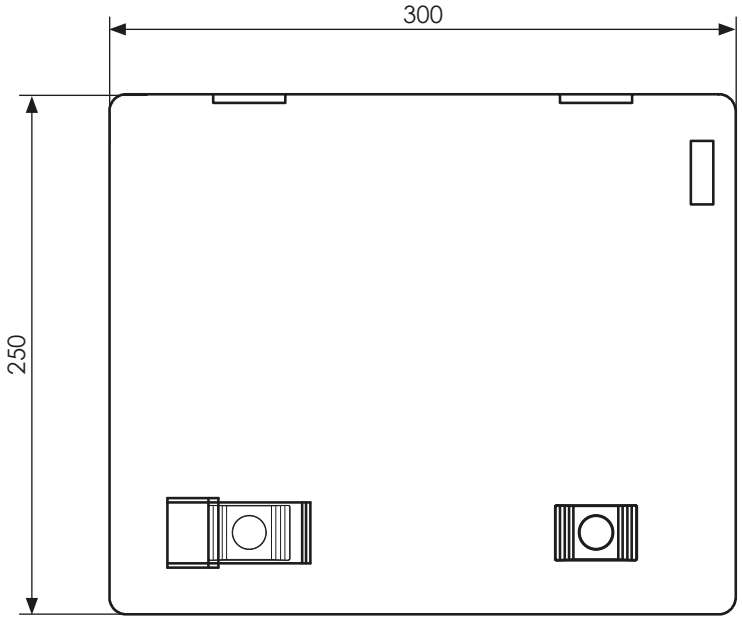

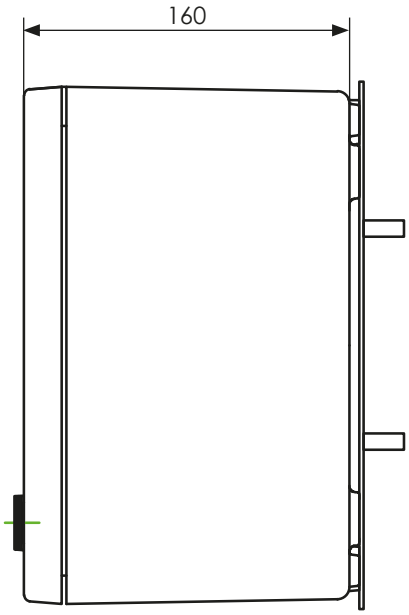

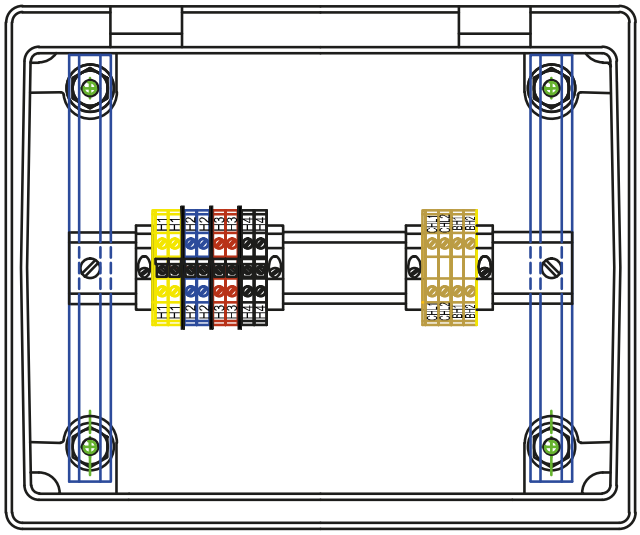

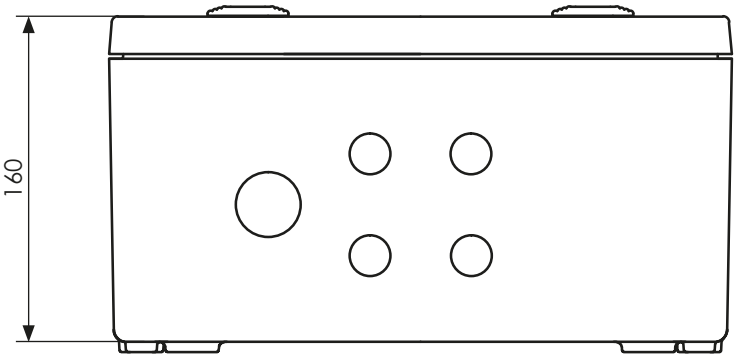

FULL RANGE OF MOUNTING OPTIONS AVAILABLE - SEE PAGES 144-153